Bell H-13H Helicopter

35 117

1/35scale detail set for Revell kit

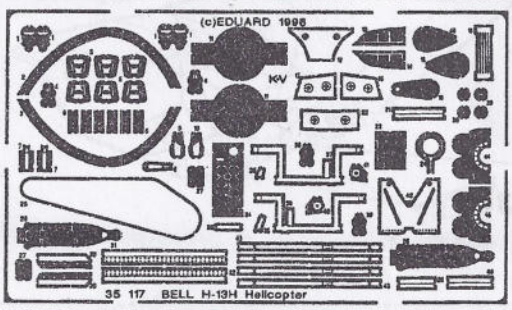

OPPOSITE SIDE

REMOVE

REPLACE

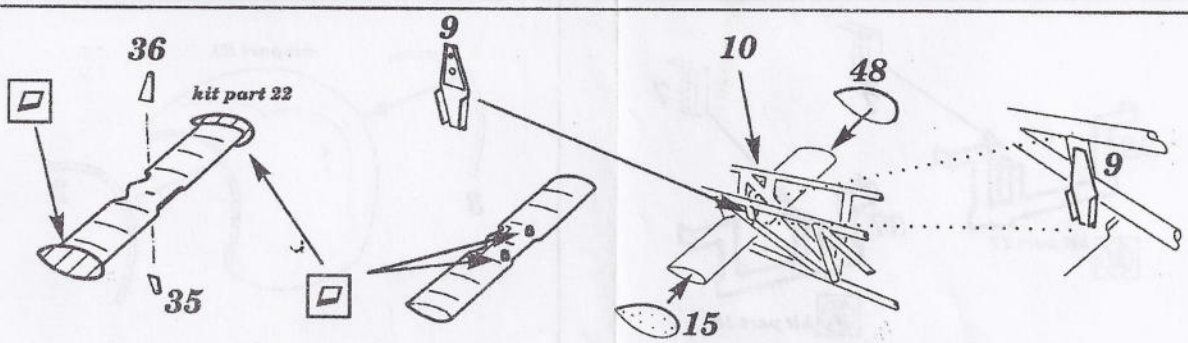

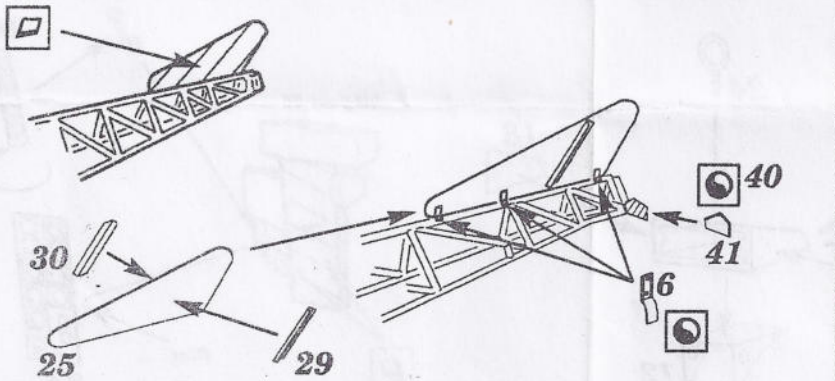

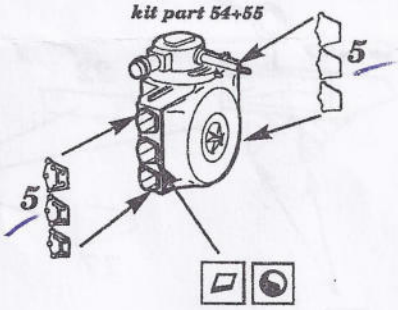

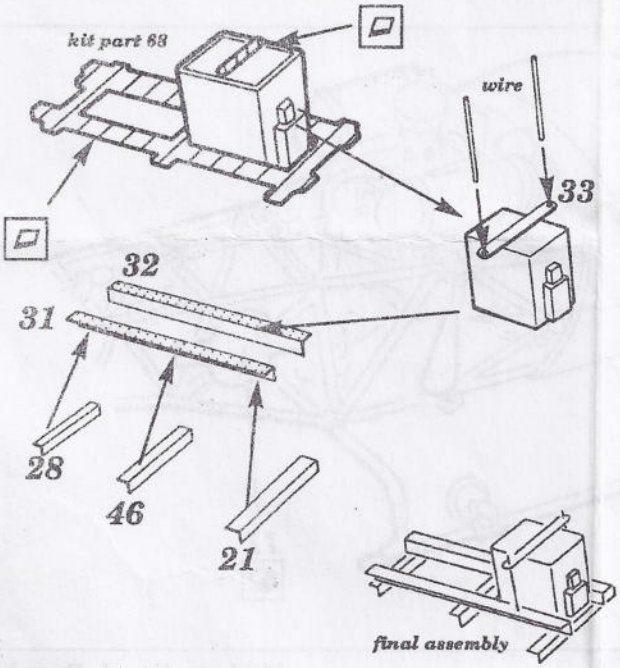

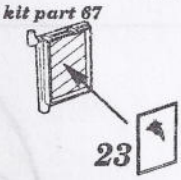

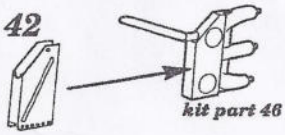

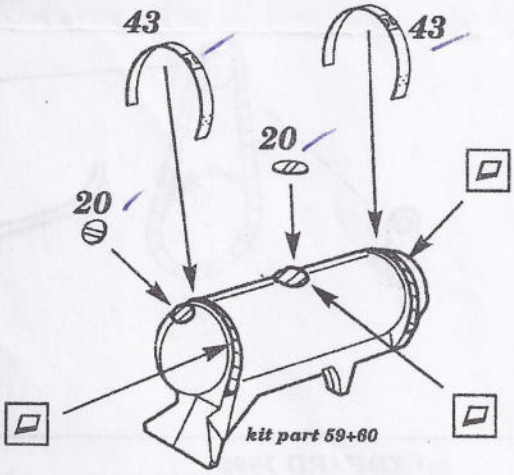

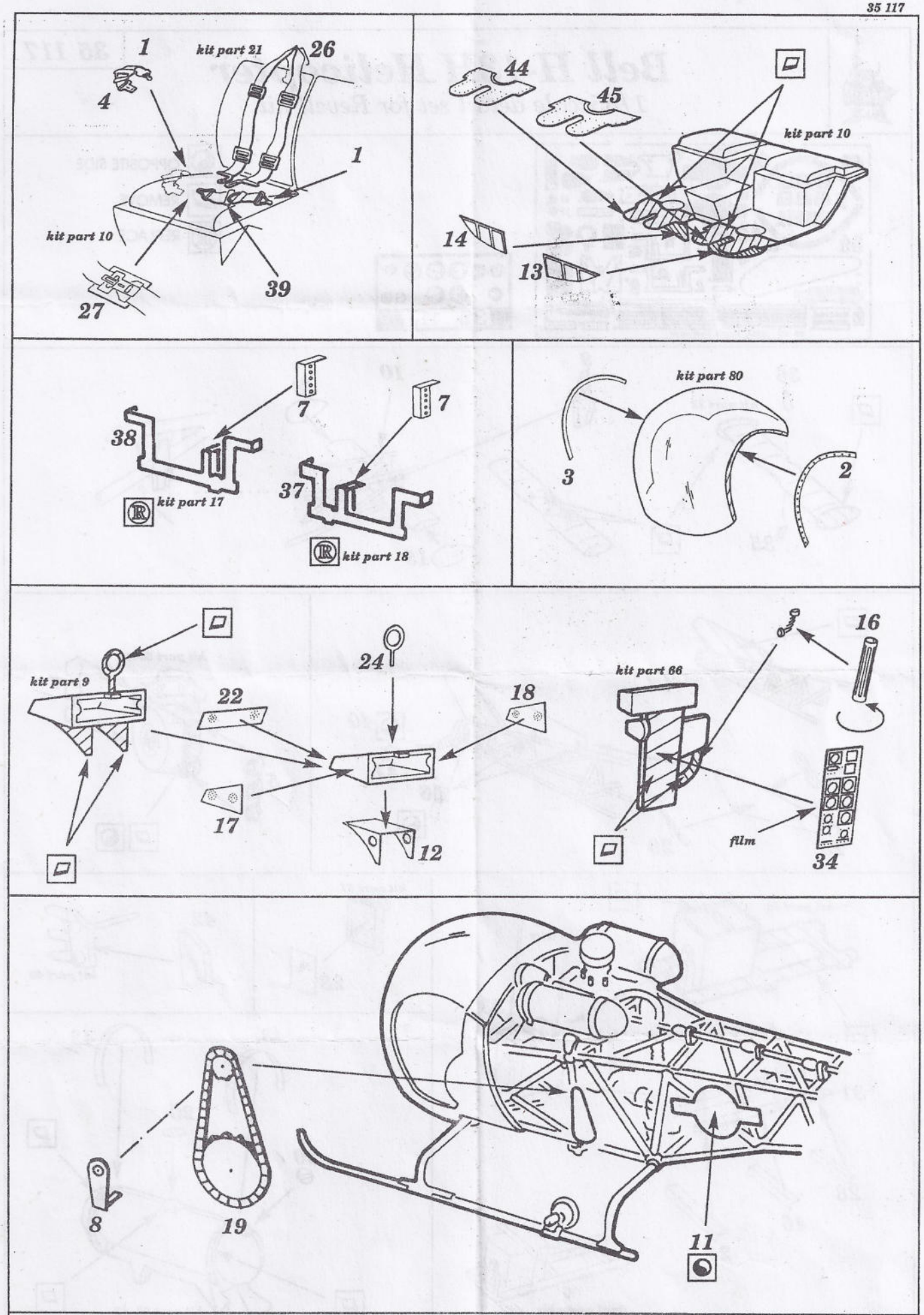

(c) EDUARD 1996

Made in Czech Republic